HAV IgM DEVICE (2-30°C)

CATALOGUE NUMBER	KIT SIZE (TESTS)
RADHAV1	20 Tests

Intended Use:
The HAV IgM Rapid Test Cassette is a rapid chromatographic immunoassay for the qualitative detection of IgM antibody to Hepatitis A Virus (HAV) in serum or plasma.

Summary:
HAV is a positive RNA virus, a unique member of picornavirdae. Its transmission depends primarily on serial transmission from person to person by the faecal-oral route. Although hepatitis A is not ordinarily a sexually transmitted disease, the infection rate is high among male homosexuals, as result of oral-anal contact.
The presence of specific anti-HAV IgM in blood samples suggests acute or recent HAV infection. The IgM antibody rapidly increases in titer over a period of 4-6 weeks post infection, and then declines to non-detectable levels within 3 to 6 months in most patients.
The HAV IgM Rapid Test Device is to be used to detect anti-HAV IgM in less than 20 minutes by untrained or minimally skilled personnel, without cumbersome laboratory equipment.

Test Principle:
The test is based on a combination of immune-chromatography and fluid dynamics. The test has recombinant mouse anti-human IgM immobilized on the membrane within the test zone. During the test the serum or plasma is added to the sample pad (S) and reacts with mouse anti-human IgM coated on the membrane there. Buffer added to the buffer well (B) migrates upwards where HAV antigen binds to particles coated with mouse anti-HAV and also the HAV antigens react specifically with the sample HAV IgM antibody immobilised in the first step. A positive result is indicated when a coloured line forms the test zone, no coloured line in the test zone indicates a negative result. To serve as a procedural control, a coloured line will always appear in the control line region indicating that proper volume of specimen has been added and membrane wicking has occurred.

Reagents:
The test device contains anti-HAV antibody particles and mouse anti-human IgM on the membrane.

Materials Provided
Individually pouched test devices
Disposable pipettes
Buffer
Sample Dilution Tubes
Instructions For Use sheet

Materials not provided: Micropipette, timer, specimen collection container, centrifuge

Precautions:
1. For professional in vitro diagnostic use only. Do not use after the expiration date.
2. The test should remain in the sealed pouch until ready to use.
3. All specimens should be considered potentially hazardous and handled in the same manner as an infectious agent.
4. The used test should be discarded according to local regulations.

Reagent Preparation and Stability:
Store as packaged at room temperature or refrigerated (2-30°C). The test is stable until the expiry date printed on the sealed pouch. The test must remain in the sealed pouch until use. **DO NOT FREEZE**. Do not use beyond the expiry date.

Specimen Collection and Storage:
1. The HAV IgM Rapid Test Device can be performed using serum or plasma.
2. Separate serum or plasma from blood as soon as possible to avoid haemolysis. Use only clear, non-haemolyzed specimens.
3. Testing should be performed immediately after specimen collection. Do not leave the specimens at room temperature for prolonged periods. Serum and plasma specimens may be stored at 2-8°C for up to 3 days. For long term storage, specimens should be kept below -20°C.
4. Bring specimens to room temperature prior to testing. Frozen specimens must be completely thawed and mixed well prior to testing. Specimens should not be frozen and thawed repeatedly.
5. If specimens are to be shipped, they should be packed in compliance with federal regulations covering the transportation of etiologic agents.

Assay Procedure:
Sample Dilution:
Using a micropipette, add 50ul of sample into the sample dilution tube. Secure the lid tightly and shake the tube for 10 seconds to ensure complete mixing. Use the diluted sample as the specimen for testing.

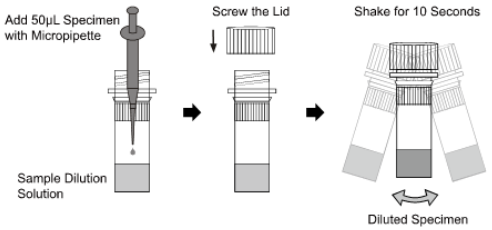

Bring tests, specimens, and/or controls to room temperature (15-30°C) before use.
1. Remove the test from its sealed pouch, and place it on a clean, level surface. Label the device with patient or control identification. For best results the assay should be performed within one hour.
2. Holding the dropper vertically draw up the diluted sample up to the fill line in the dropper and then dispense one drop (approximately 5µl) of the diluted sample into the sample area (S) of the test device.
3. Alternatively, use a micropipette to pipette 5ul of the diluted sample and dispense it into the sample (S) area of the test device.
4. Add 2 drops (approximately 80µl) of buffer to the Buffer well (B) of the device and start the timer.
5. Wait for the coloured lines to appear. Read the result in 20 minutes, do not interpret the result after 30 minutes.

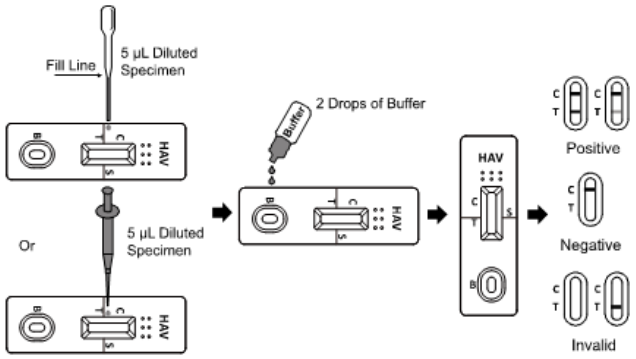

Interpretation of Results:

POSITIVE: Two coloured bands appear on the membrane. One band appears in the control region (C) and another band appears in the test region (T).

NEGATIVE: Only one coloured band appears, in the control region (C). No apparent coloured band appears in the test region (T).

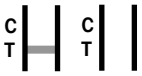

INVALID: Control band fails to appear. Results from any test which has not produced a control band at the specified read time must be discarded. Please review the procedure and repeat with a new test. If the problem persists, discontinue using the kit immediately and contact your local distributor.

NOTE:
1. The intensity of the colour in the test region (T) will vary depending on the concentration of HAV IgM present in the specimen. Therefore, any shade of colour in the test region (T) should be considered positive.

Quality Controls:

- Internal procedural controls are included in the test. A coloured band appearing in the control region (C) is an internal positive procedural control, confirming sufficient specimen volume and correct procedural technique.
- External controls are not supplied with this kit. It is recommended that positive and negative controls be tested as a good laboratory practice to confirm the test procedure and to verify proper test performance.

Limitations of the Test:
1. The Assay Procedure and the Assay Result Interpretation must be followed closely when testing the presence of anti-HAV IgM in serum or plasma from individual subjects. Failure to follow the procedures may give inaccurate results.
2. The HAV IgM Rapid Test Device is limited to the qualitative detection of anti-HAV IgM in human serum or plasma. The intensity of the test band does not have linear correlation with the antibody titer in the specimen.
3. A negative result for an individual subject indicates absence of detectable anti-HAV IgM. However, a negative test result does not preclude the possibility of exposure to or infection with HAV.
4. A negative result can occur if the quantity of the anti-HAV IgM present in the specimen is below the detection limits of the assay, or the antibodies that are detected are not present during the stage of disease at which a sample is collected.
5. Some specimens containing unusually high titer of heterophile antibodies or rheumatoid factor may affect expected results.
6. The results obtained with this test should only be interpreted in conjunction with other diagnostic procedures and clinical findings.

Expected Values:
The HAV IgM Rapid Test Device (Serum/Plasma) has been compared with a leading commercial HAV EIA test. The correlation between these two systems is over 99%.

Performance Characteristics:

Sensitivity and Specificity
The HAV IgM Rapid Test Cassette (Serum/Plasma) was compared with a leading commercial ELISA HAV IgM test; the results show that The HAV IgM Rapid Test Device (Serum/Plasma) has a high sensitivity and specificity.

Prestige Diagnostics U.K. Ltd 40 Ballymena Business Centre, Galgorm, Co. Antrim, BT42 1FL, United Kingdom. Tel: +44 (0) 28 2564 2100
www.prestigediagnostics.co.uk info@prestigediagnostics.co.uk

Method		HAV IgM ELISA		Total Results
HAV IgM Rapid Device Test	Result	Positive	Negative	
	Positive	118	4	122
	Negative	6	466	472
Total Results		124	470	594

Relative Sensitivity: 95.2% (95%CI*: 89.8% - 98.2%) *Confidence Interval
Relative Specificity: 99.1% (95%CI*: 97.8% - 99.8%)
Accuracy: 98.3% (95%CI*: 96.9% - 99.2%)

References:

1. Minor P. Picornaviridae. In: Francki RIB, Fauquet CM, Knudson DL, et al., eds. Classification and nomenclature of viruses (Arch Virol Supp 2). Wien: Springer-Verlag,1991: 320-326.
2. Keeffe EB. Clinical approach to viral hepatitis in homosexual men. Med Clin North Am. 1986;70(3):567-86.
3. Ballesteros J, Dal-Re R, Gonzalez A, del Romero J. Are homosexual males a risk group for hepatitis A infection in intermediate endemicity areas? Epidemiol Infect. 1996; 117(1):145-8.
4. Bradley DW, Maynard JE, Hindman SH, et al: Serodiagnosis of viral hepatitis A: Detection of acute-phase immunoglobulin M anti-hepatitis A virus by radioimmunoassay. J Clin Microbiol 1977; 5: 521-530.
5. Decker RH, Kosakowski SM, Vanderbilt AS, et al: Diagnosis of acute hepatitis A by HAVAB-M : A direct radioimmunoassay for IgM anti-HAV. Am J Clin Pathol 1981;76:140- 147.
6. Locarnini SA, Ferris AA, Lehman NI, et al: The antibody response following hepatitis A infection. Intervirology 1974; 4:110-118.
7. Skinhoj P, Mikkelsen F, Hollinger FB. Hepatitis A in Greenland: Importance of specific antibody testing in epidemiologic surveillance. Am J. Epidemiol 1977; 105: 104-147

GLOSSARY OF SYMBOLS

REF	Catalog number		Temperature limitation
	Consult instructions for use	LOT	Batch code
IVD	*In vitro* diagnostic medical device		Use by
	Manufacturer		Do not reuse

CE

Prestige Diagnostics U.K. Ltd 40 Ballymena Business Centre, Galgorm, Co. Antrim, BT42 1FL, United Kingdom. Tel: +44 (0) 28 2564 2100
www.prestigediagnostics.co.uk info@prestigediagnostics.co.uk

V4: rev Jan 2018